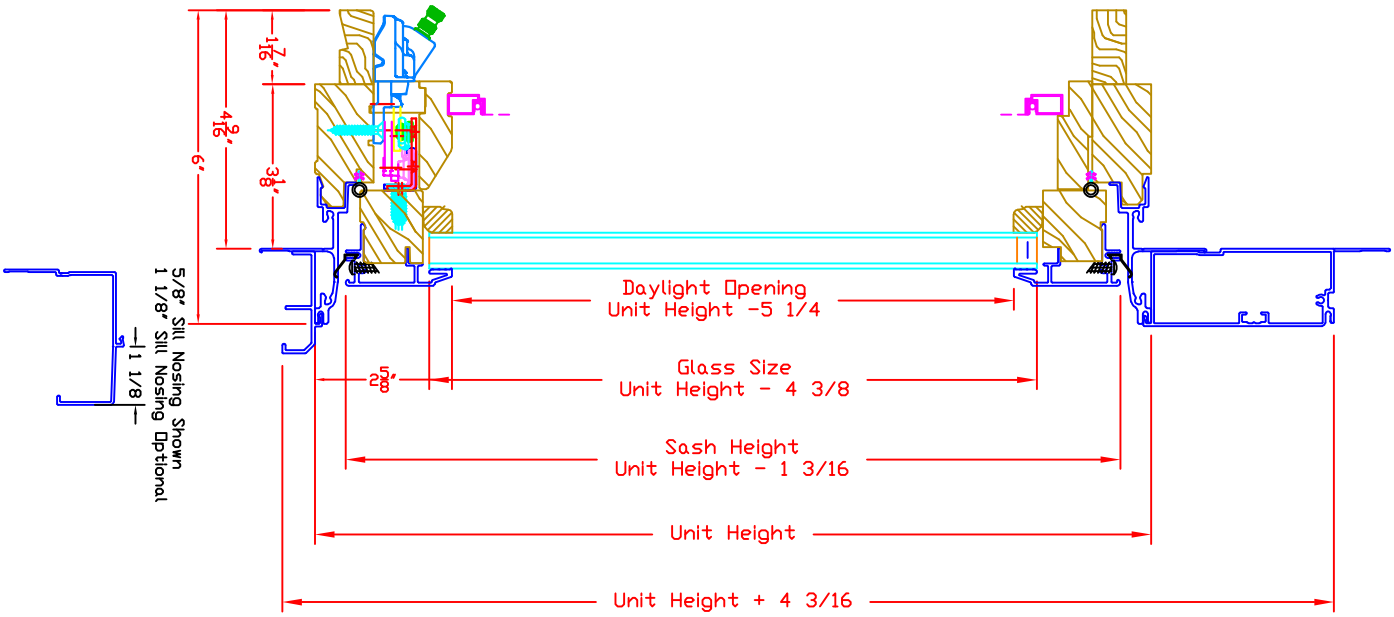
5/8" Sill Nosing Shown
1 1/8" Sill Nosing Optional
1 1/8"
6"
4 9/16"
1 7/16"
3 1/8"
2 5/8"
Daylight Opening
Unit Height -5 1/4
Glass Size
Unit Height - 4 3/8
Sash Height
Unit Height - 1 3/16
Unit Height
Unit Height + 4 3/16

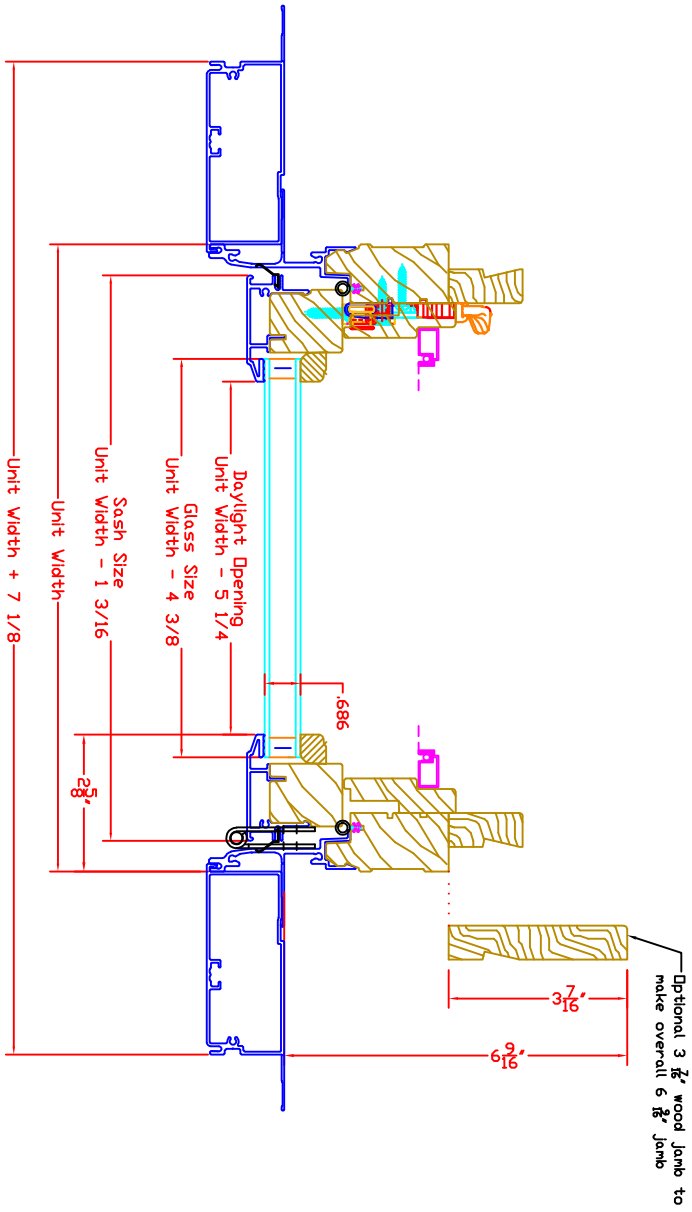
Unit Width + 7 1/8
Unit Width
Sash Size
Unit Width - 1 3/16
Glass Size
Unit Width - 4 3/8
Daylight Opening
Unit Width - 5 1/4
.686
2 5/8"
3 7/16"
6 9/16"
Optional 3 7/16" wood jamb to
make overall 6 9/16" jamb