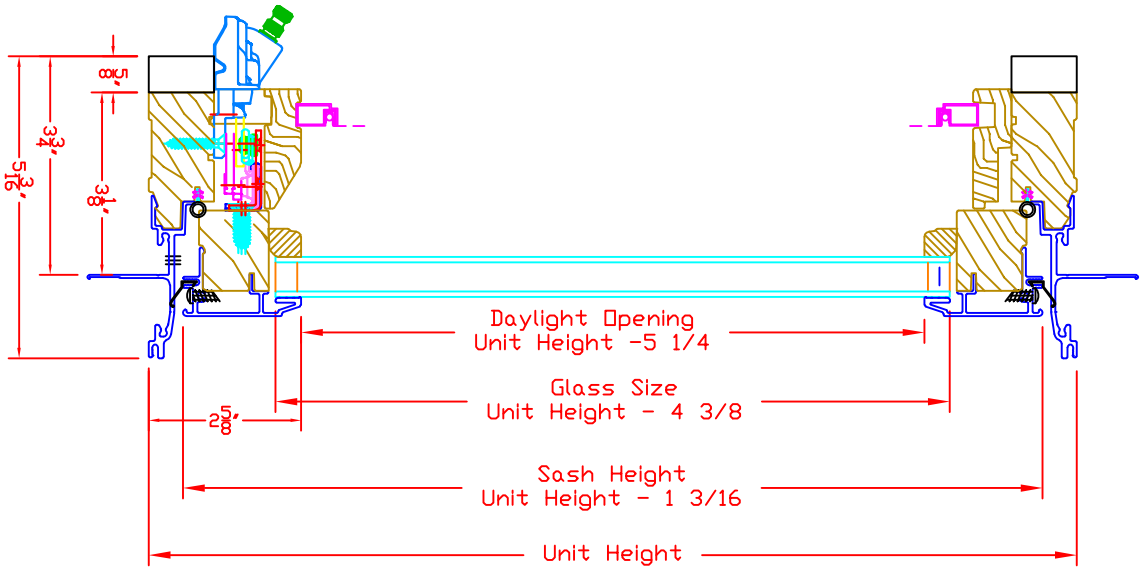
5/8"
3 3/4"
5 3/16"
3 1/8"
Daylight Opening
Unit Height -5 1/4
Glass Size
Unit Height - 4 3/8
2 5/8"
Sash Height
Unit Height - 1 3/16
Unit Height

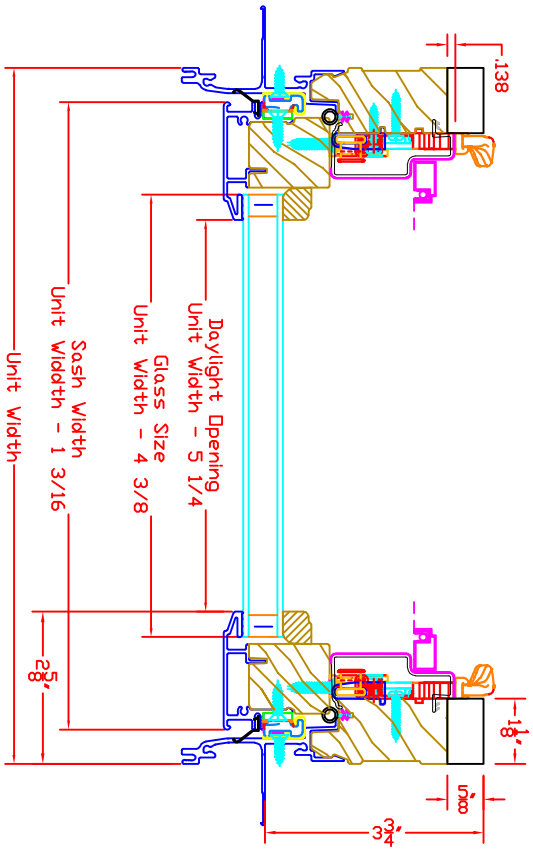
.138
Unit Width
Sash Width
Unit Widdth - 1 3/16
Glass Size
Unit Width - 4 3/8
Daylight Opening
Unit Width - 5 1/4
2 5/8"
1 1/8"
5/8"
3 3/4"