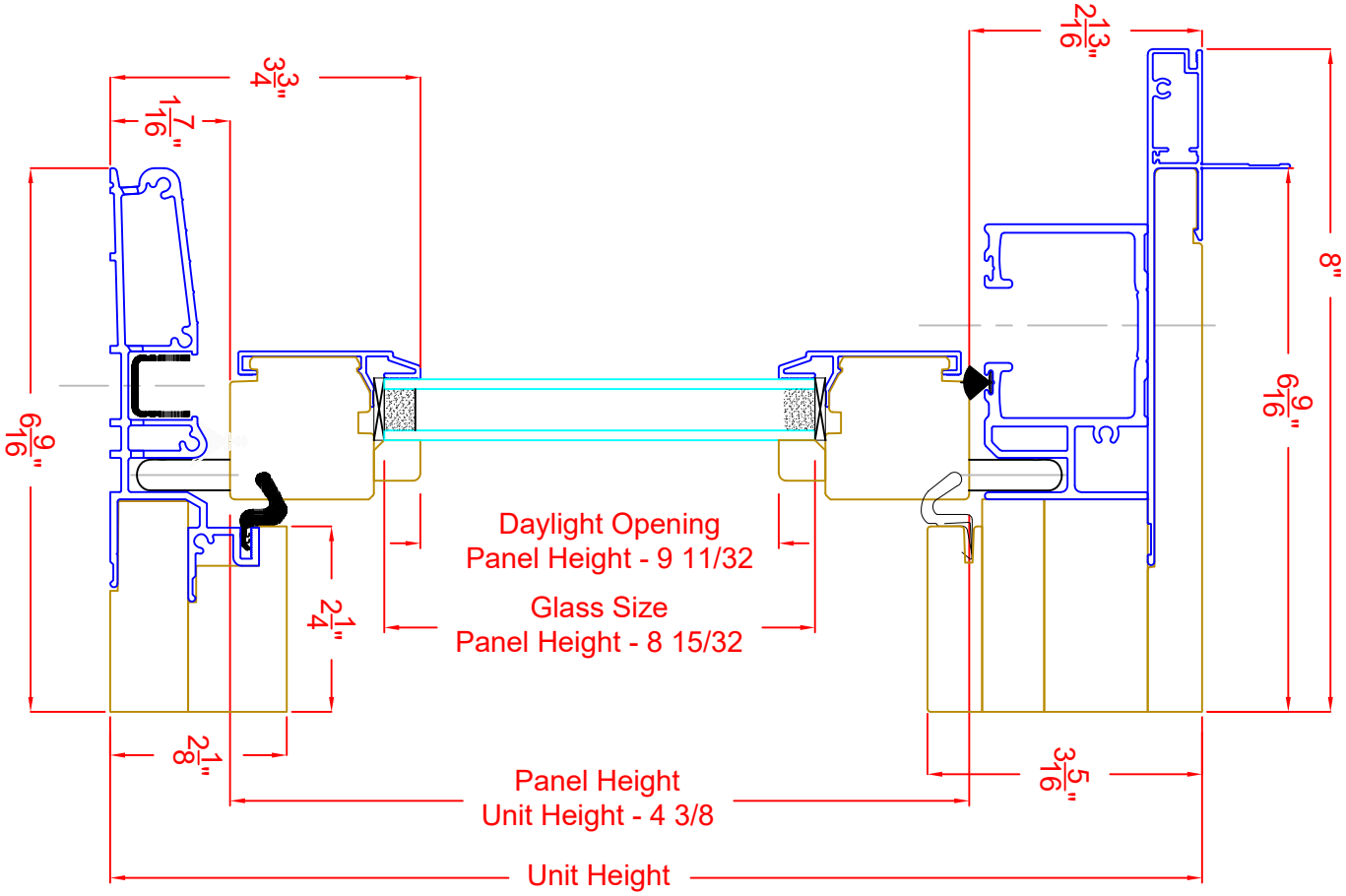

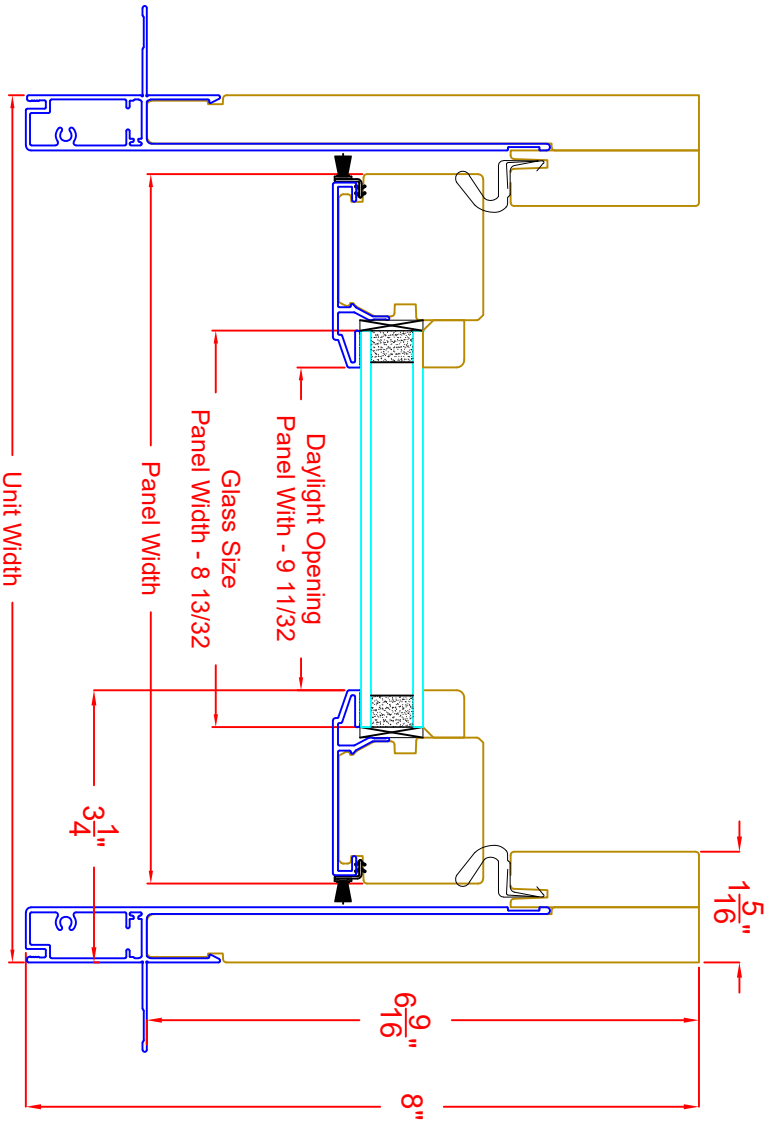
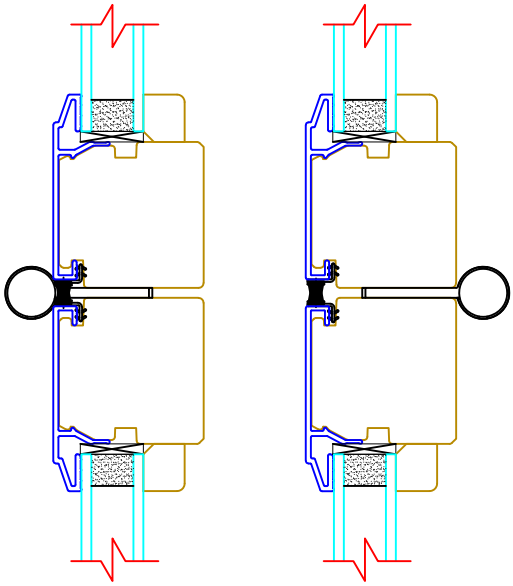
*See Layout Configurations Chart for Available Options