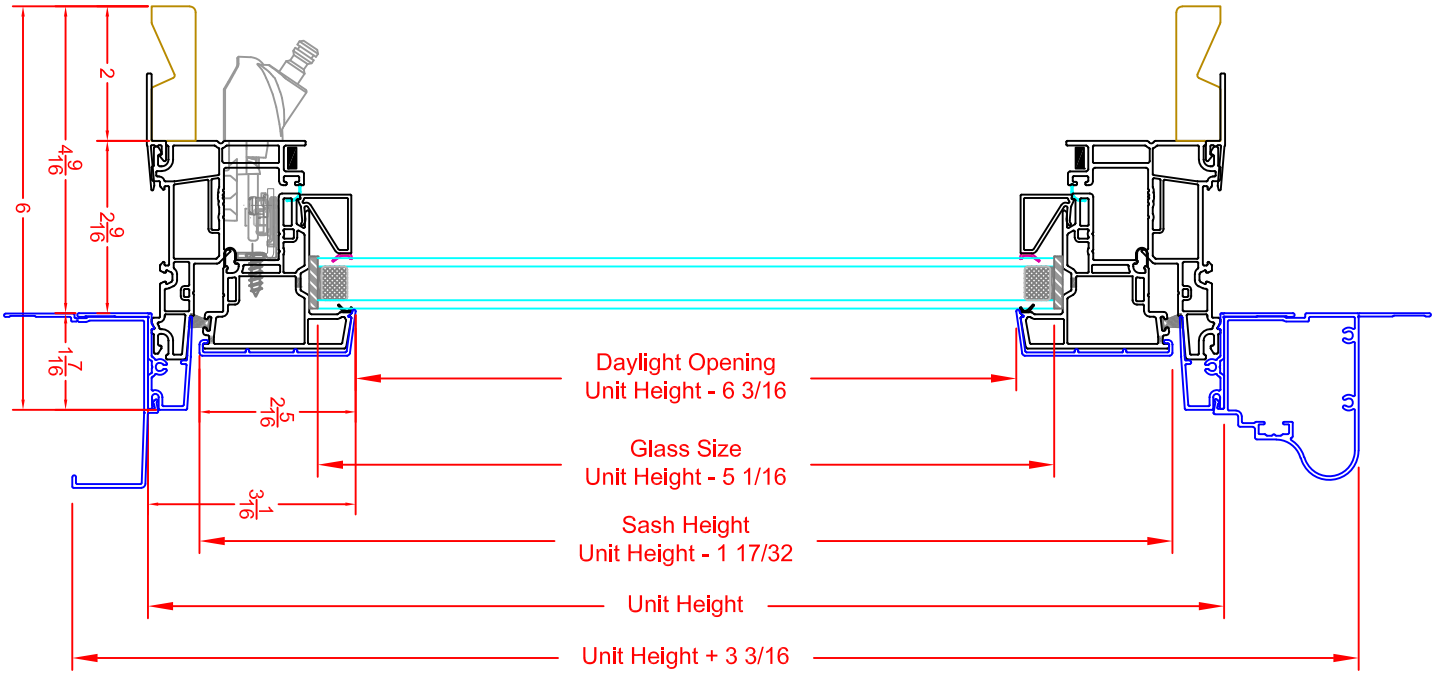
Daylight Opening
Unit Height - 6 3/16
Glass Size
Unit Height - 5 1/16
Sash Height
Unit Height - 1 17/32
Unit Height
Unit Height + 3 3/16
6
4 9/16
2
2 9/16
1 7/16
2 5/16
3 1/16

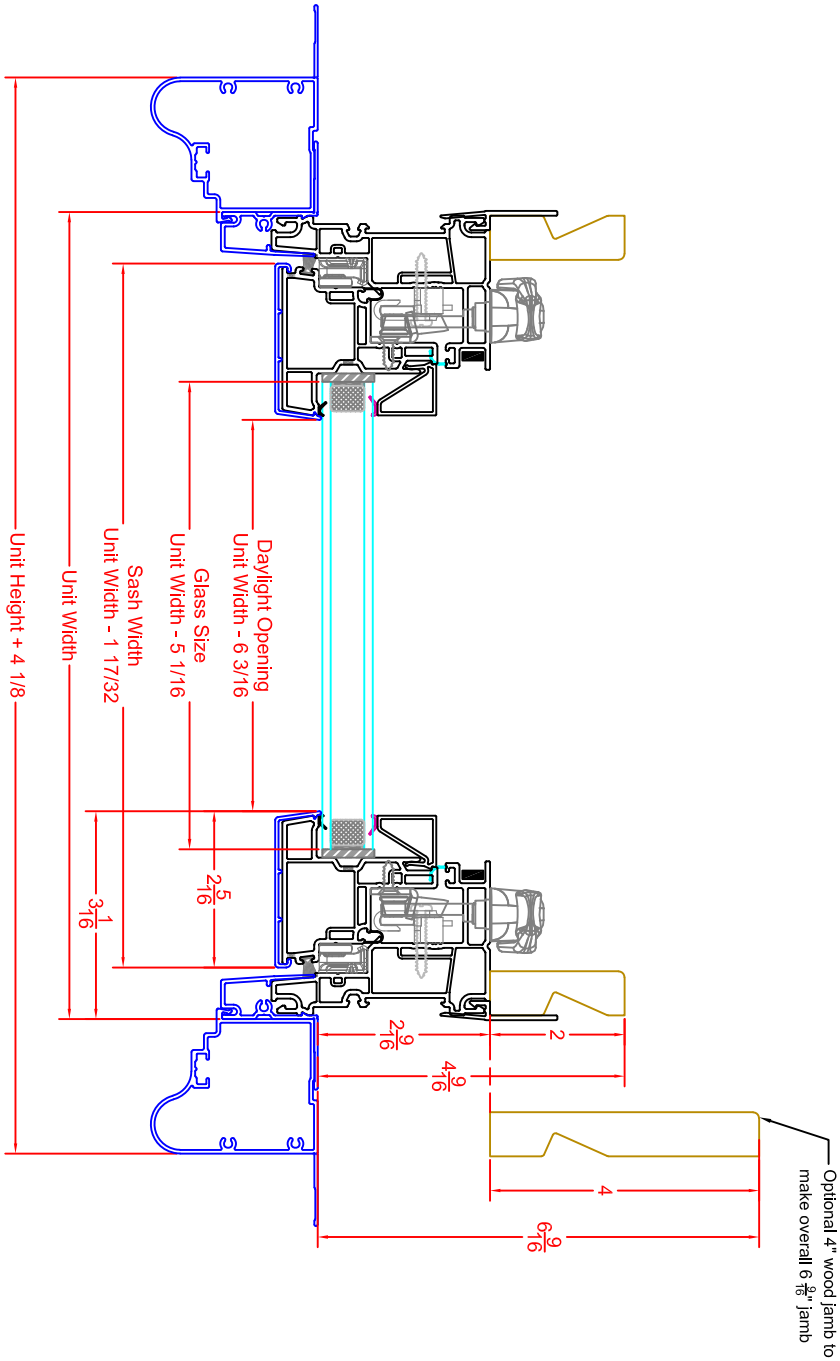
Unit Height + 4 1/8
Unit Width
Sash Width
Unit Width - 1 17/32
Glass Size
Unit Width - 5 1/16
Daylight Opening
Unit Width - 6 3/16
3 1/16
2 5/16
2 9/16
2
4 9/16
4
6 9/16
Optional 4" wood jamb to
make overall 6 9/16" jamb